# PREMIUM PVC LED LIGHTBOX

## Sizes - 2000 Wide

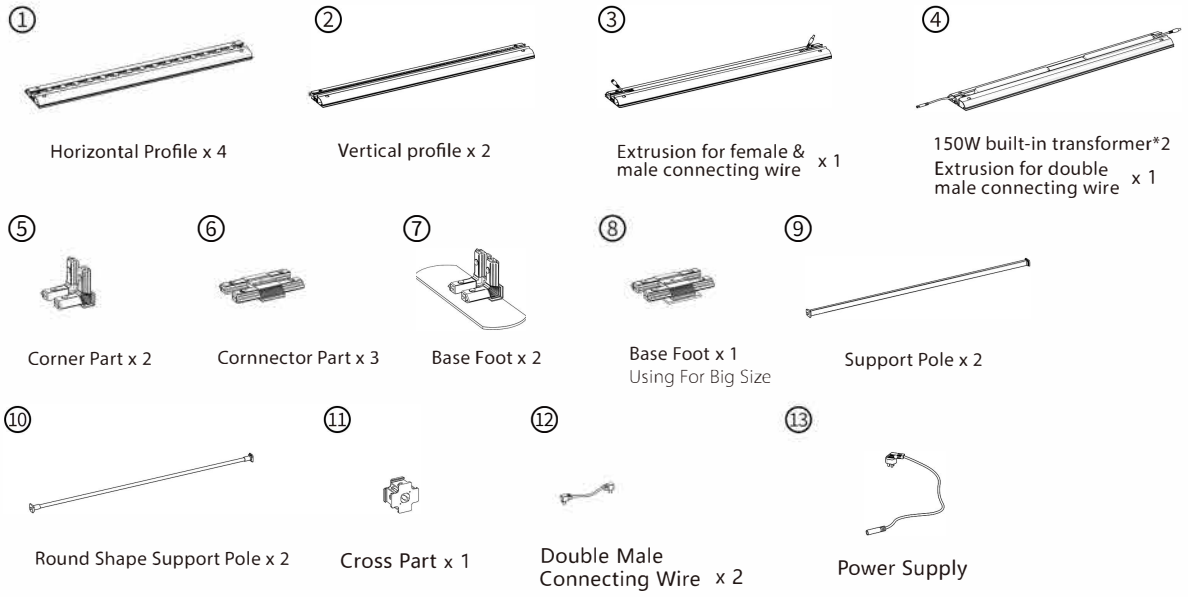


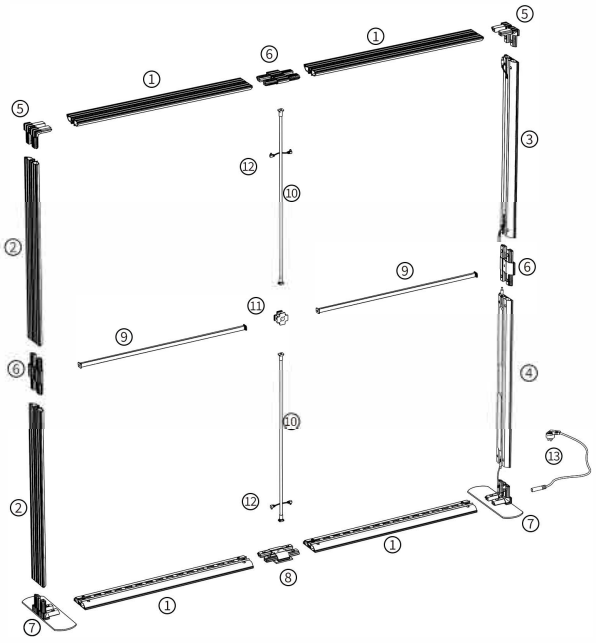

ELECTRIC
CIRCUIT LAYOUT

1

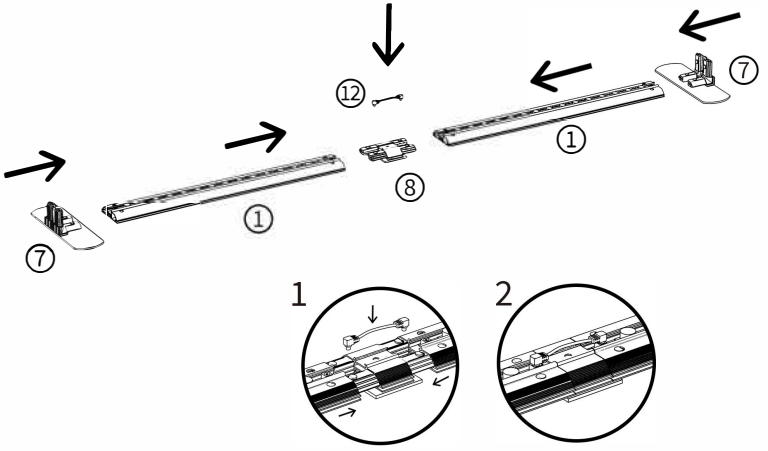


2

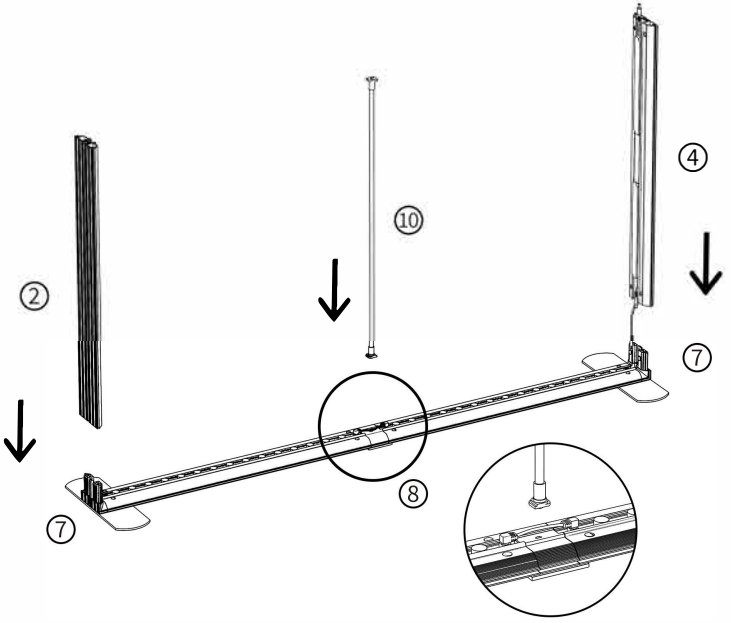

## 3

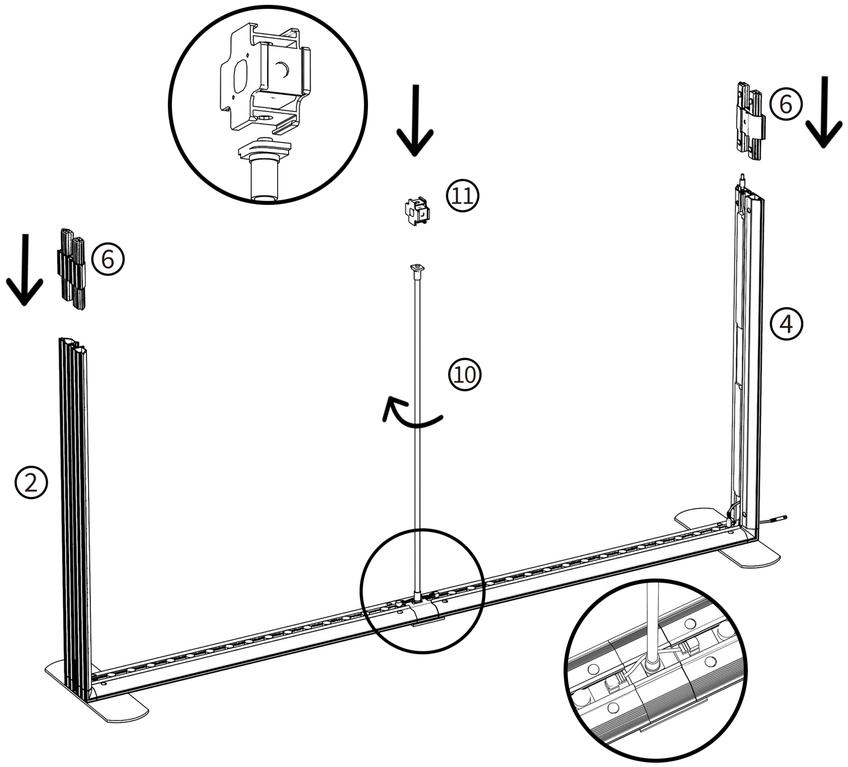


## 4

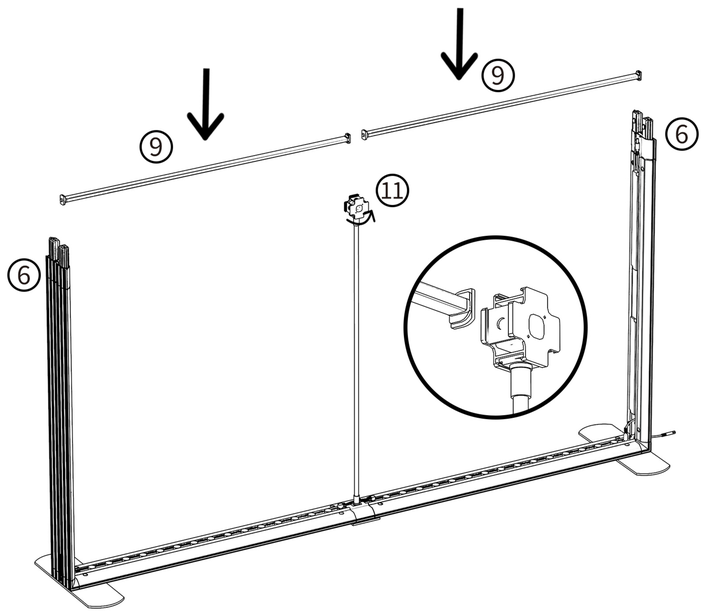


## 5

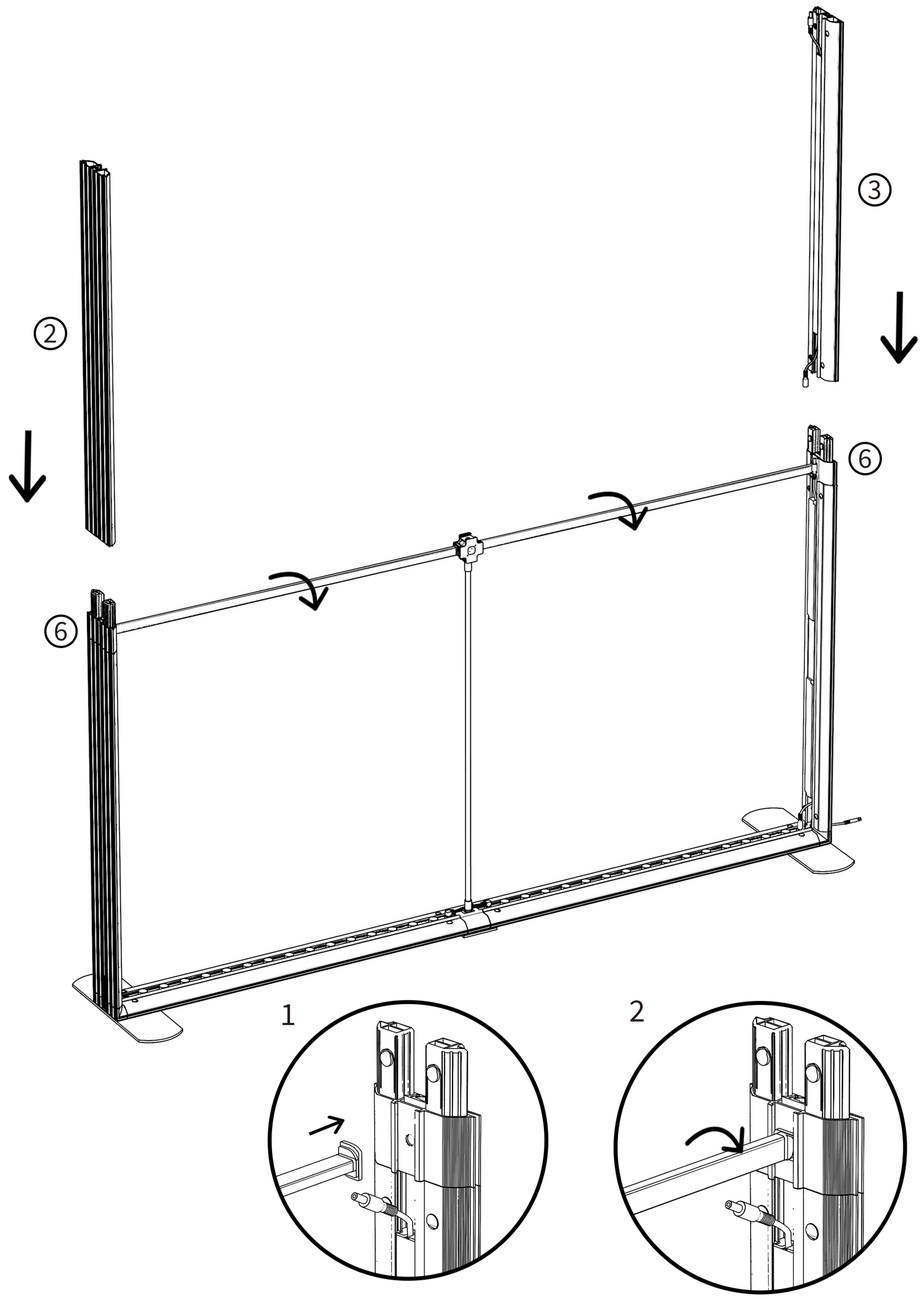

## 6

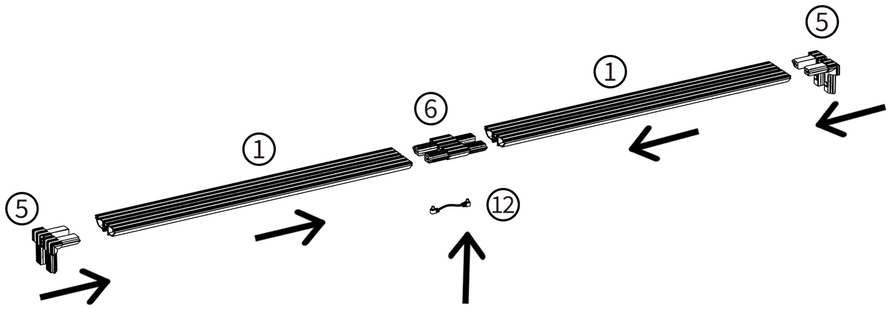


## 7

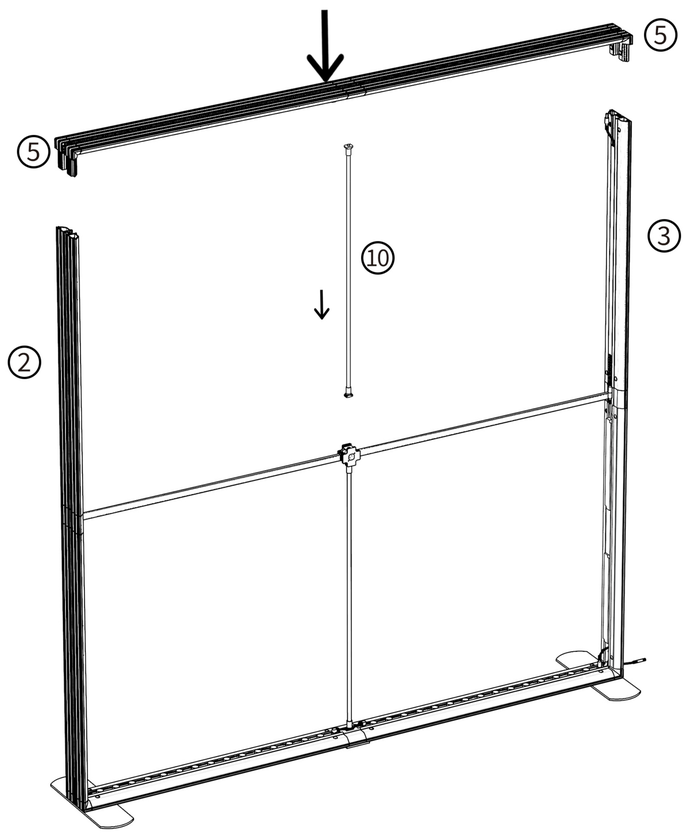


## 8

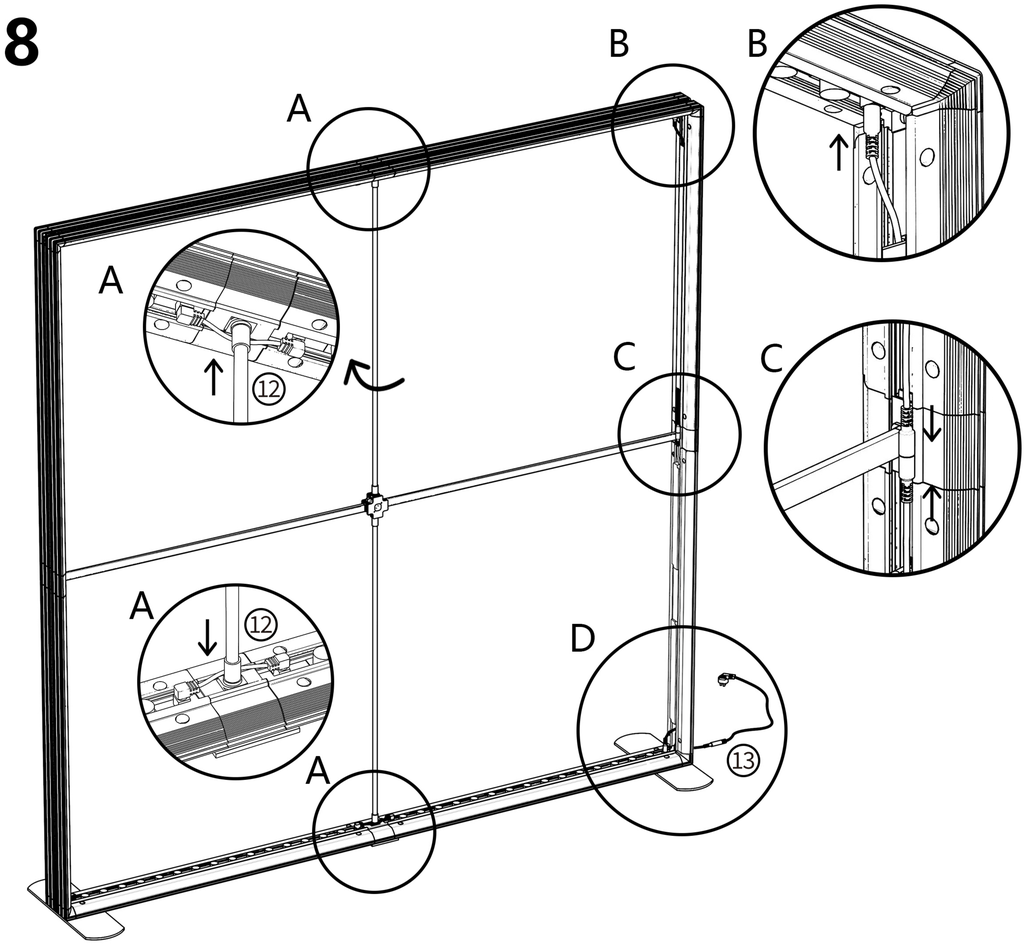


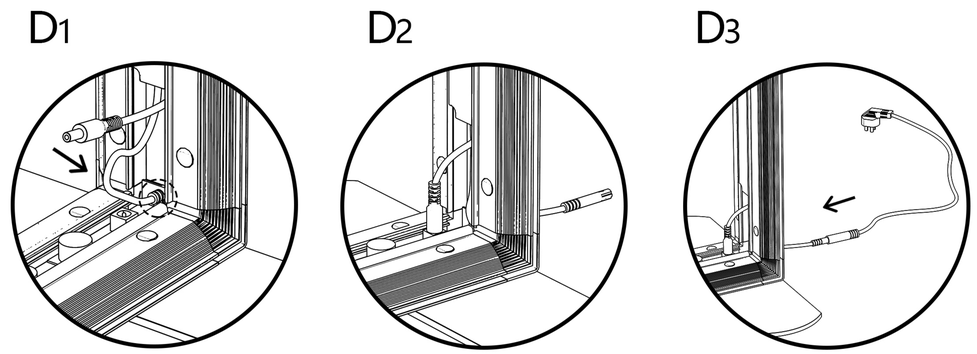
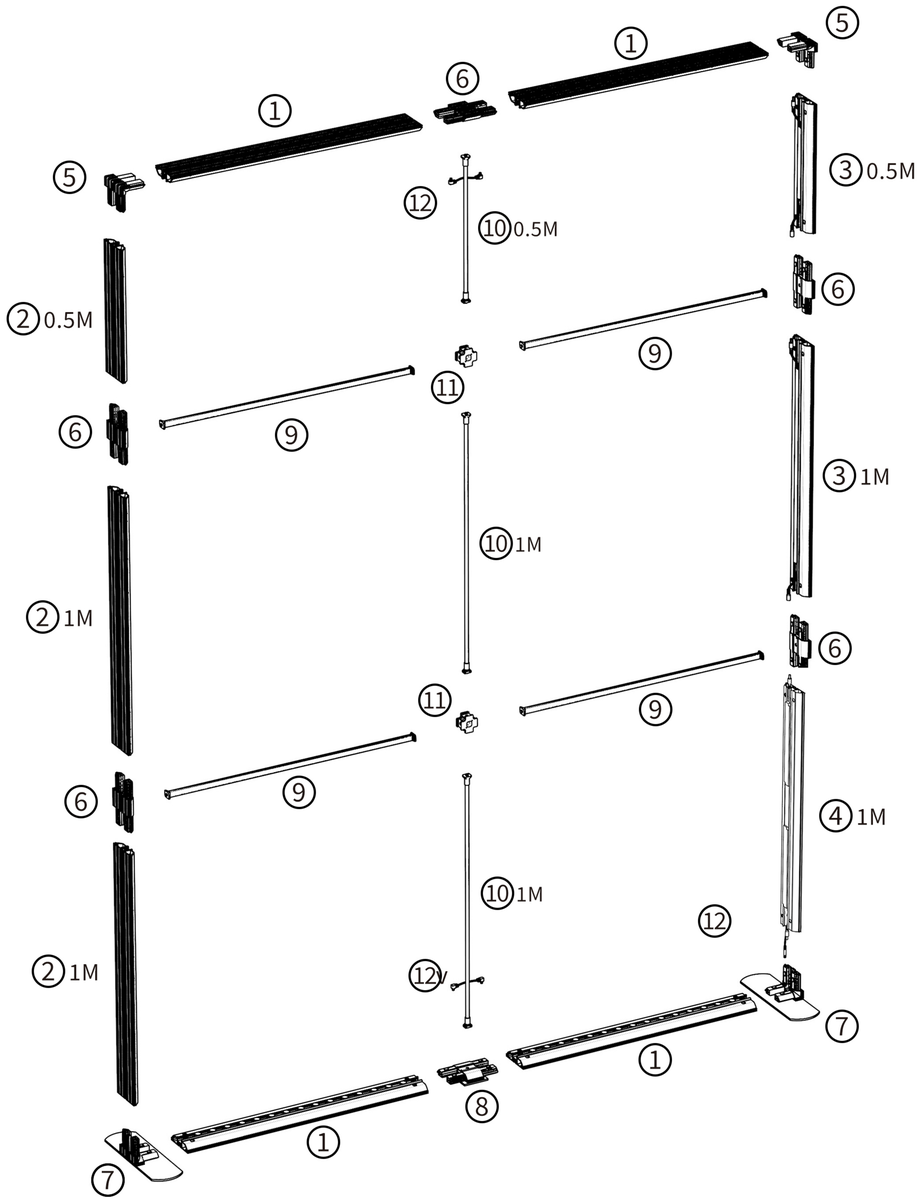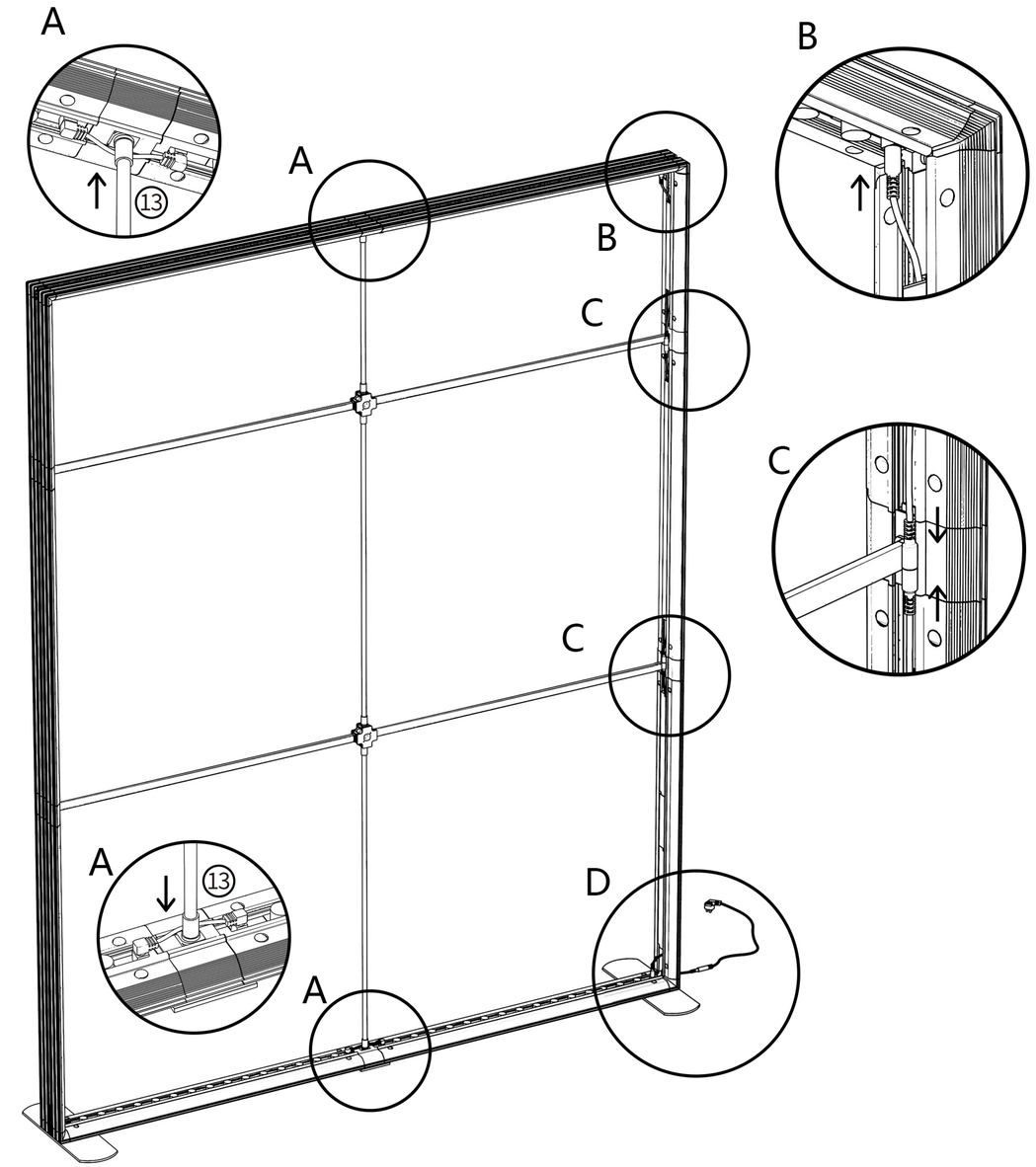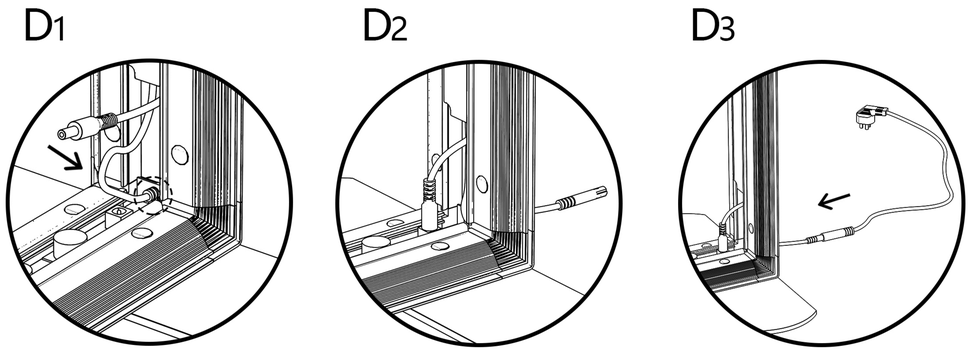
1500/1850/2000X2500(1000+1000+500)